ACCESSORIES					
MK	SIZE	DESCRIPTION	DEG	ELEV	DOME

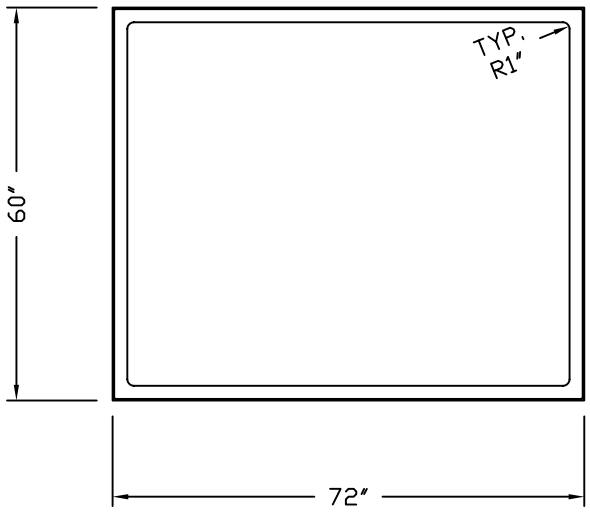

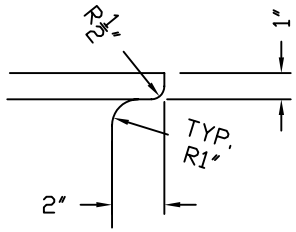

DETAIL "A"

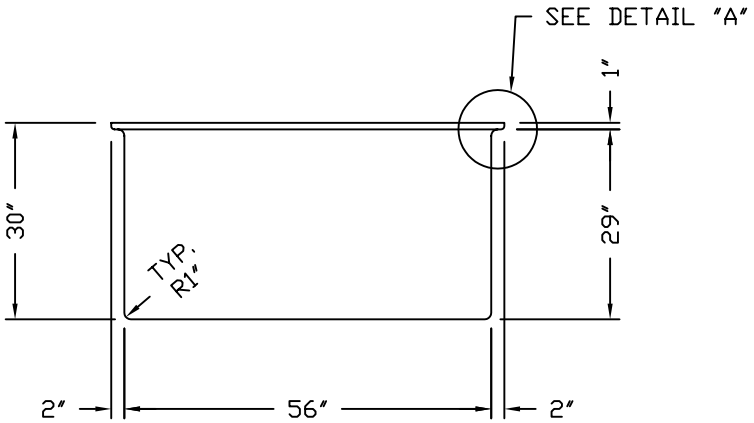

REV	REVISION DESCRIPTION	REV DATE

Assmann CORPORATION OF AMERICA
300 N TAYLOR ROAD
GARRETT, IN 46738
PHONE: (260) 357-3181
FAX: (260) 357-3738

RESIN USED: – – –

TANK DESIGNED SPECIFIC GRAVITY – SP.G. MAX

TANK WEIGHT – LBS.

TANK COLOR –

TITLE IRD 440 GALLON RECTANGULAR CONTAINMENT BASIN

DRAWN BY: D. MYERS | DRAWN DATE: 3/9/09 | CUSTOMER APPROVAL

ASSMANN CORPORATION

ALL DIMENSIONS ARE IN INCHES AND ARE ±3%

DWG NUMBER: IRD 440 | REV –