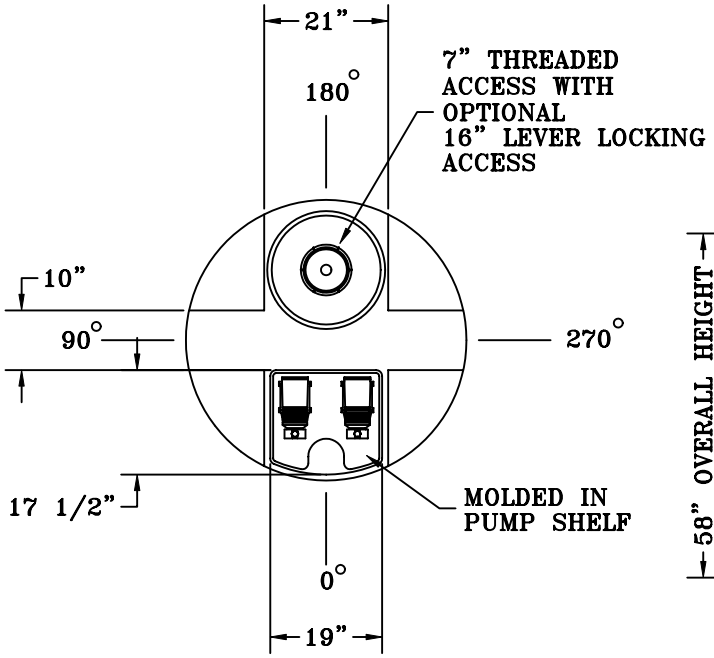

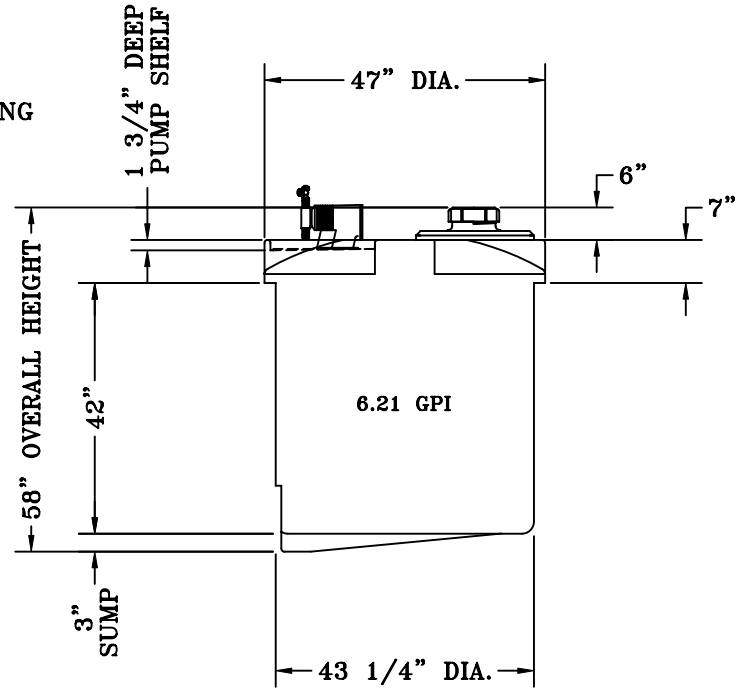

NOTES:

1 PRIMARY
CALCULATED GALLONS PER INCH
6.21 GPI
CALCULATED GALLONS IN BODY
250 GALLONS

2 SECONDARY
CALCULATED GALLONS PER INCH
7.35 GPI
CALCULATED GALLONS
336 GALLONS

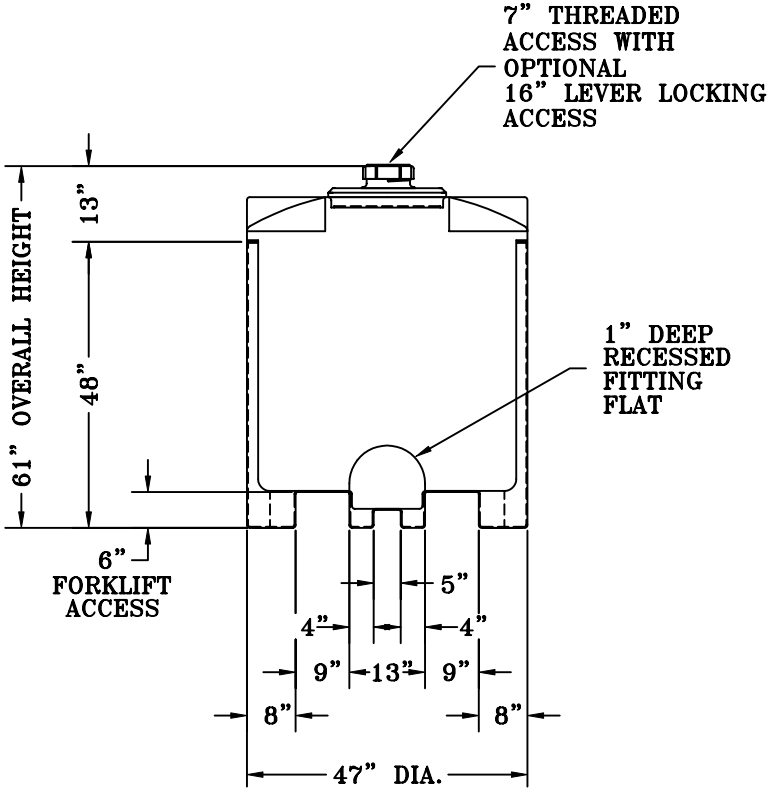

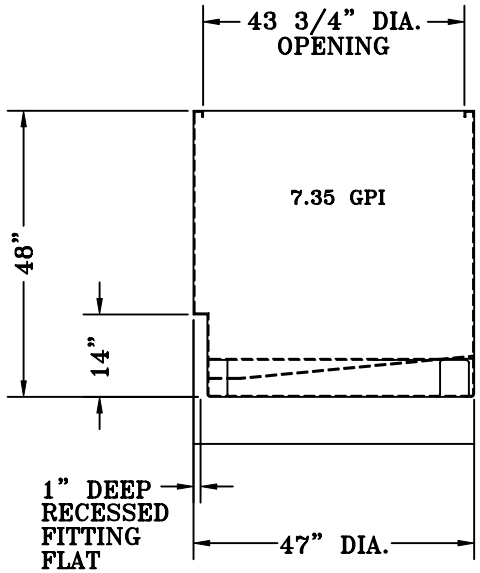

DWG TITLE: IMT 250 GAL DOUBLE WALL STORAGE TANK		
SCALE NONE	Assmann CORPORATION OF AMERICA	DR D. CRAGER
DATE 9/24/01		CUSTOMER APPROVAL
		DWG NO IMT 250-2