ACCESSORIES					
MK	SIZE		DEG	ELEV	DOME

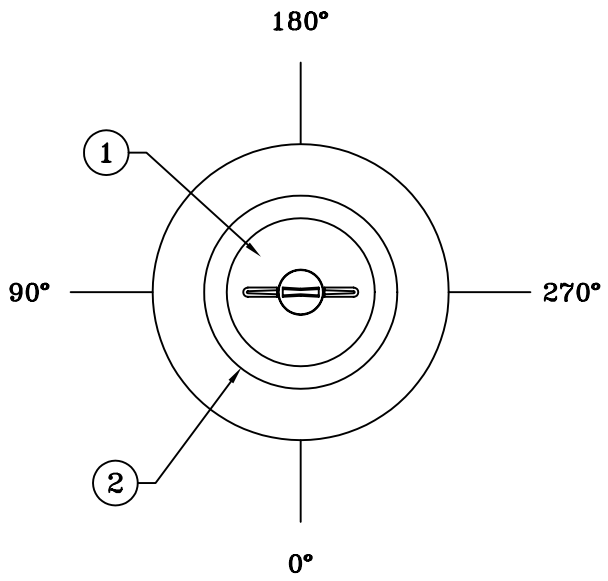

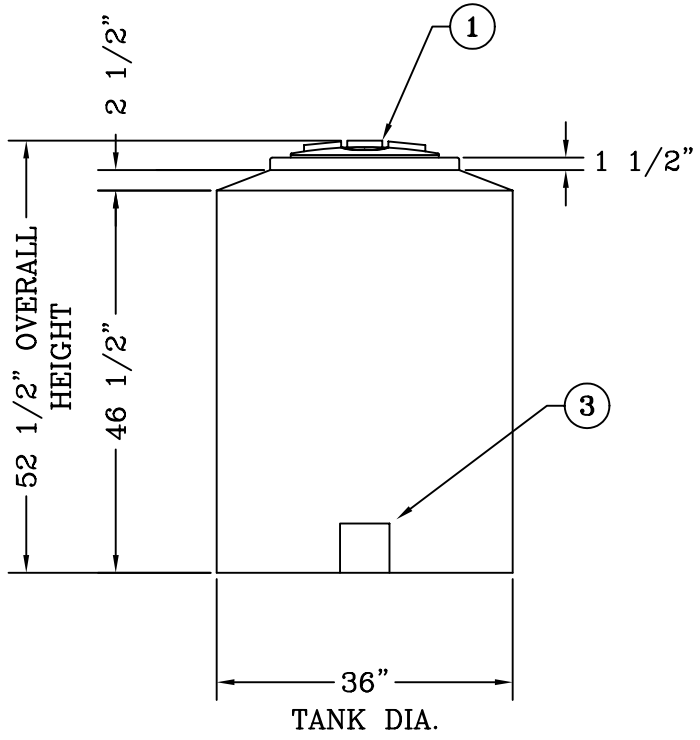

NOTES:

1. Std. 16" MANWAY W/THREADED COVER AND REMOVABLE AIR BREATHER
2. 23 1/2" DIA. MANWAY FLAT
3. LOWER FITTING FLAT 6" X 6"

DWG TITLE: ICT 200 GALLON VERTICAL STORAGE TANK		
SCALE NONE	Assmann CORPORATION OF AMERICA	DR S.Rowlison
DATE 10/3/03		CUSTOMER APPROVAL
		DWG NO ICT 200 / REV